4CleanPro

SCRUBBER-DRYER

# TWIST 40

## USE AND MAINTENANCE MANUAL

CE

| EN | Original instructions |
|---|---|

*Revision: 0.0*

# Table of contents


**1 GENERAL INFORMATION ..... 5**

1.1 MANUFACTURER IDENTIFICATION DATA ..... 5
1.2 AIM OF THE MANUAL ..... 5
1.3 TERMINOLOGY AND SYMBOLS ..... 6
1.4 INTENDED USE AND UNINTENDED USE ..... 7
1.5 TECHNICAL MODIFICATIONS ..... 7
1.6 PRODUCT IDENTIFICATION ..... 7

**2 SAFETY INFORMATION ..... 8**

2.1 BASIC RECOMMENDATIONS ..... 8
2.2 TECHNICAL SUPPORT ..... 11
2.3 VIBRATION INFORMATION ..... 11

**3 HANDLING INFORMATION ..... 12**

3.1 DIMENSIONS AND WEIGHT OF PACKAGE ..... 12
3.2 LIFTING AND HANDLING THE PACKAGE ..... 12
3.3 INSPECTION UPON DELIVERY ..... 13
3.4 UNPACKING ..... 13
3.5 ASSEMBLING THE MACHINE ..... 14
3.6 TRANSPORTING THE MACHINE AFTER USE ..... 14

**4 TECHNICAL INFORMATION ..... 15**

4.1 GENERAL DESCRIPTION OF COMPONENTS ..... 15
4.2 CONTROL PANEL (VERSION 4 AND ABOVE) ..... 16
*4.2.1 VACUUM LEVEL CONTROL ..... 16*
4.3 DIMENSIONS AND TECHNICAL DATA ..... 17

**5 USING THE MACHINE ..... 18**

5.1 PREPARING THE MACHINE ..... 18
5.2 RECHARGING THE BATTERY ..... 19
5.3 FITTING AND REMOVING THE BRUSH ..... 19
*5.3.1 BRUSH TYPES ..... 20*
5.4 MOVING THE MACHINE ..... 22
5.5 STORAGE ..... 22
5.6 LOCKING / RELEASING, RAISING THE SQUEEGEE ..... 23
5.7 FITTING AND REMOVING THE SQUEEGEE ..... 23
5.8 REPLACING THE SQUEEGEE BLADES ..... 24
5.9 FILLING AND EMPTYING THE SOLUTION TANK ..... 24
5.10 DRAINING THE RECOVERY TANK ..... 26
5.11 OPERATING THE MACHINE ..... 27
5.12 FLOOR CLEANING INSTRUCTIONS ..... 28
*5.12.1 PREPARATION AND WARNINGS ..... 28*
*5.12.2 DIRECT WASHING OR FOR SLIGHTLY DIRTY SURFACES ..... 28*

*5.12.3 INDIRECT WASHING OR FOR VERY DIRTY SURFACES ..... 28*
*5.12.4 POST-CLEANING OPERATIONS ..... 28*

**6 MAINTENANCE ..... 29**

6.1 TANKS ..... 29
6.2 DETERGENT SOLUTION TANK FILTER ..... 29
6.3 SUCTION HOSE ..... 29
6.4 SQUEEGEE ..... 30
6.5 VACUUM FILTER ..... 30
6.6 ACCESSORIES ..... 30
6.7 MACHINE BODY ..... 31
6.8 MAINTENANCE SCHEDULE ..... 31
6.9 EXTRAORDINARY MAINTENANCE ..... 32
6.10 RECOMMENDED SPARE PARTS ..... 32

**7 TROUBLESHOOTING ..... 33**

**8 DISPOSAL OF THE MACHINE ..... 34**

# 1 GENERAL INFORMATION

## 1.1 MANUFACTURER IDENTIFICATION DATA

**4CLEANPRO S.r.l.**
Via Mugellese,99
50013 Campi Bisenzio (FI) - ITALY
Telephone: +39 055 898139

Website: www.4cleanpro.com

The manufacturer accepts no liability for damage or injury caused by:

- The improper use of the machine or its use by unauthorised or unskilled personnel to carry out certain tasks and/or during training courses.
- The machine being used in a manner that does not conform to national safety and accident prevention regulations.
- The disabling or removal of safety devices installed on the machine.
- The improper installation and / or connection to the intended power supplies (power supply defects).
- The lack of or inadequate preventive maintenance.
- Making modifications to or carrying out unauthorised work on the machine.
- The use of non-original or unsuitable spare parts.
- The total or partial failure to comply with the instructions provided.
- Exceptional conditions.

## 1.2 AIM OF THE MANUAL

To make it easier to look up and read about the subjects of interest, refer to the table of contents at the beginning of the manual.
This manual has been written by the manufacturer and is an integral part of the product. As such, it should be kept safely for the entire service life of the machine until it is demolished.
The customer must make sure that operators have read or are familiar with the contents of this manual and that they strictly follow the instructions provided.
The only way to obtain the best results in terms of safety, performance, efficiency and durability of your product is to always comply with the instructions provided in this manual.
Failure to comply with these instructions may cause injury to persons or damage to the machine, the surface that is being cleaned and to the environment. Under no circumstances can such injuries or damage be attributed to the manufacturer.

## 1.3 TERMINOLOGY AND SYMBOLS

For greater clarity and to adequately highlight the various aspects of the instructions described, specific terms and symbols have been used. These are defined and illustrated below:

| Term | Definition |
|---|---|
| Machine | This replaces the commercial name of the machine to which this manual refers. |
| Operator | A person who normally uses the machine and who is familiar with how to operate it, as well as being familiar with the use of various types of detergent but who is not able to carry out work on the machine that requires specific technical skills. |
| Technician | A person who has the necessary requisites (experience, technical skills and legislative and regulatory knowledge) that allows him to carry out any type of work required and that has the ability to recognise and avoid possible hazards during the installation, operation, handling and maintenance of the machine. |

| Symbols and warnings |
|---|

**DANGER!**
**Symbol that draws attention to essential information to avoid serious (or extreme) consequences that affect the health of persons, the integrity of the product and damage to the environment in which it is used.**

**CAUTION**
**Symbol that accompanies information containing procedures and/or instructions that are essential to understand and follow to avoid damage to the machine and to the environment in which it is used.**

**NOTE:**
*Symbol used to highlight important information which if ignored, could cause damage to the machine.*

## 1.4 INTENDED USE AND UNINTENDED USE

The machine referred to in this manual (**TWIST 40**) is an operator-controlled hard floor scrubber-dryer. It must be used to scrub and vacuum liquids on flat, hard, horizontal, smooth or moderately rough and uniform floors that are free from obstacles in both civil and industrial environments.

**DANGER!**
**Any other use is strictly prohibited!**
**Please read the safety information provided in this manual very carefully.**

The scrubber-dryer distributes a quantity of a solution consisting of water and detergent (that can be regulated) onto the surface to be cleaned, while the brushes remove any dirt from the surface.
The machine's vacuum system, with the aid of the squeegee, completely dries the liquids and removes the dirt removed by the front brushes in a single pass.
By matching the correct detergent with various types of brush (or abrasive disks), the machine can adapt to all the various floor-dirt combinations.

## 1.5 TECHNICAL MODIFICATIONS

This machine was designed and built in accordance with the fundamental requirements for user health and safety pursuant to the European directives. The CE mark was therefore placed on the rating label.
The European directives to which the appliance is compliant are referred to in the Certificate of Conformity, attached to this manual. This certificate will cease to be valid if the appliance is modified in any way without the manufacturer's prior authorisation.
The manufacturer reserves the right to make technical modifications to the product without prior notice in order to make technical upgrades or improvements.
For this reason, some details of your machine may be different from the information contained in the sales catalogues or the illustrations shown in this booklet. Nevertheless, this will not affect safety or invalidate the information provided regarding it.

## 1.6 PRODUCT IDENTIFICATION

Make sure that there is a rating label containing the serial number and the CE mark attached to the machine.
If there isn't, please inform your dealer immediately.

The rating plate contains the following information:

- Manufacturer's identification data
- CE mark
- Model code
- Serial number
- Total power rating
- Year of construction

# 2 SAFETY INFORMATION

## 2.1 BASIC RECOMMENDATIONS

**NOTE:**
*Read the "instructions manual" before starting up, using, or carrying out scheduled or unscheduled maintenance or any other work on the machine.*

**CAUTION**
**Strictly comply with all the instructions provided in this manual and those regarding the batteries and battery chargers (pay particular attention to safety warnings and danger notices).**
**The manufacturer declines all liability for injury or damage due to the failure to comply with the above-mentioned instructions.**

**NOTE:**
*Before using the machine, make sure that all parts are in their correct position.*

**CAUTION**
**The machine must only be used by personnel who have been trained to use it, who have proven their ability to use it and who have been expressly instructed to use it. To avoid unauthorised use, when not in use, store the machine in a place that is not accessible by unauthorised personnel.**
**Never allow minors to use the machine.**
**Never use this machine for any purpose other than for those for which it was specifically designed. Consider the type of building in which it is to be used and comply fully with the current rules and safety regulations of the building.**

**DANGER!**
**Never use the machine in poorly lit areas, in explosive environments, in the presence of dirt that is hazardous to health (dust, gas etc.), on roads or public passageways and outdoors in general.**

**CAUTION**
**The machine operating temperature range is +4°C to + 35°C. When not in use, store the machine in a dry and non-corrosive environment in which the temperature is between + 10°C and + 50°C. The humidity range for the machine is between 30% and 95%, whatever the conditions.**

**DANGER!**
**Never use or vacuum liquids, gases, dry dust, acids and solvents (e.g. paint thinners, acetone etc.), even if diluted that are inflammable or explosive (e.g. petrol, fuel oil etc.). Never vacuum objects that are on fire or incandescent.**

**CAUTION**
**Do not use the machine on slopes or ramps that are steeper than 2%. On sight slopes, never use the machine sideways, always manoeuvre it with care and never reverse. When transporting the machine on steep ramps or slopes, be very careful to prevent it tipping over and/or accelerating uncontrollably. Use only the lowest speed! The machine should only negotiate ramps and/or steps with the brush head and squeegee raised.**
**NEVER leave the machine on a slope.**

**NOTE:**
*Never leave the machine unattended without first making sure that it cannot move accidentally and that it is disconnected from the power supply.*

**DANGER!**
**When using the machine, pay attention to other people, especially children in the area where the machine is being used.**

**CAUTION**
**Do not use the machine to transport persons / things or to tow things. Do not tow the machine.**

**NOTE:**
*Do not for any reason use the machine as a support for any amount of weight.*
*Do not obstruct the ventilation and heat discharge vents.*

**CAUTION**
**Do not remove, modify or bypass the safety devices.**
**Operators should always use personal protective equipment (both when using the machine and when carrying out maintenance on it):**

- **apron or overalls**
- **non-slip waterproof footwear**
- **rubber gloves**
- **goggles and ear protectors**
- **breathing mask**

**Before starting to use the machine, remove jewellery, watches, ties and other items that could potentially cause serious injury.**
**Never insert hands between moving parts.**

**NOTE:**
*Do not use detergents other than the ones intended and follow the instructions on the relative safety data sheets.*
*Detergents should be kept in a place that is inaccessible to children. In case of contact with the eyes, rinse immediately with copious amounts of water. If swallowed, consult a doctor immediately.*
*Make sure that the power outlets used for the battery charger are connected to an efficient earthing system and that they are protected by magneto thermal and differential circuit breakers.*

**DANGER!**
**Do not place tools on top of the batteries: they may cause a short-circuit or an explosion.**
**In the presence of particularly strong magnetic fields, asses the possible effect they may have on electronic control devices.**
**Never clean the machine using water jets.**

**NOTE:**
*The fluids that are recovered contain detergents, disinfectant and water together with organic and inorganic substances collected whilst the machine is in use. They must be disposed of according to the current applicable legislation.*

**NOTE:**
*Before each use, check the machine. In particular, check that the battery charging cable and connector are in good condition and safe for use.*
*If they are not in perfect condition, do not use the machine for any reason until repairs have been carried out by an authorised technician.*

**NOTE:**
*Turn off the vacuum motor immediately if you notice any foam or liquid leaking from the appliance.*
*Do not use the machine on textile floor coverings such as rugs, carpets etc.*
*The use of wax, foaming detergents or dispersions may cause serious damage to the machine or clog the hoses.*

**CAUTION**
**If the machine breaks down and/or malfunctions, turn it off immediately (unplug it from the electric power supply or the batteries) and do not tamper with it.**
**Contact one of the manufacturer's technical support centres.**

## 2.2 TECHNICAL SUPPORT

**DANGER!**
**All maintenance work or the replacement of accessories must be carried out in areas with adequate lighting and only after having disconnected the machine from the power supply by unplugging the battery connector.**

**NOTE:**
*All work on the electrical system and all maintenance and repair work (especially work not specifically described in this manual) should only be carried out by skilled personnel with experience in the field and knowledge of the relevant safety regulations.*
*Only ORIGINAL SPARE PARTS, supplied exclusively by the manufacturer, should be used. Only these parts can provide the assurance that the appliance will work safely and efficiently.*
*Do not use parts that have been removed from other machines or other kits as replacement parts.*
*Do not wait until the components are worn out; replacing a component at the right time means that the machine will perform better and at the same time savings will be made by avoiding further damage.*

The manufacturer provides its customers with a Technical Support Service to help resolve any issues there may be regarding the use and maintenance of the machine.
Any requests for assistance must be made after having carefully assessed the problems and their causes.
When making a written request, please specify the following:

- Machine model
- Serial number
- Details of the problem
- The checks carried out
- Any adjustments made and their effect
- Any other information you think may be useful

Send the request to the manufacturer using the following e-mail address: info@4cleanpro.com

## 2.3 VIBRATION INFORMATION

The test conditions in which the vibration measurements were carried out comply with the provisions of the European standards and directives in force and are described in detail in the relative technical report held by the Manufacturer.
The daily value (8 hours) of exposure to vibrations transmitted to the hand-arm system is less than 2.5 m/s2.
This value can only be used as a comparison value and is not suitable for determining real levels which depend on the conditions and environment of use.

# 3 HANDLING INFORMATION

## 3.1 DIMENSIONS AND WEIGHT OF PACKAGE

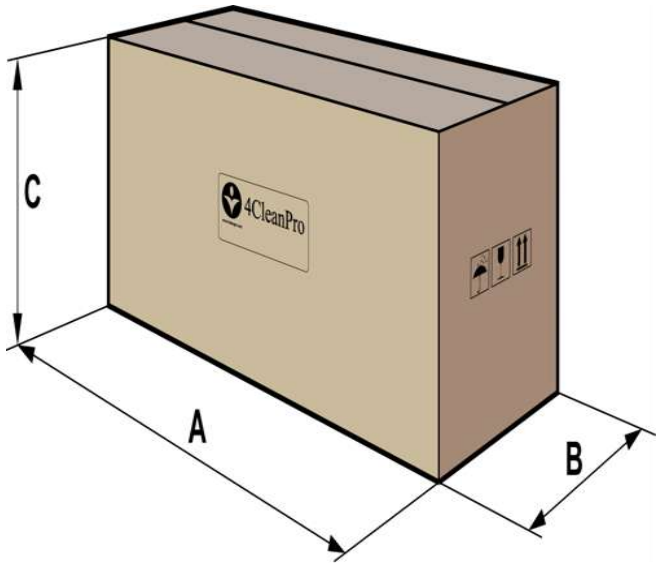


| | |
|---|---|
| **Weight:** | 54,5 kg |
| **Volume:** | 0,28 m3 |
| **A** | 820 mm |
| **B** | 410 mm |
| **C** | 840 mm |

## 3.2 LIFTING AND HANDLING THE PACKAGE

**CAUTION**
**When lifting or transporting the machine, make sure that the packaged machine is securely anchored to prevent it from tipping over or falling accidentally.**

Vehicle loading and unloading operations must be carried out with adequate lighting.
The packaged machine must be handled using suitable equipment. Care must be taken not to damage/hit any part of the packaging, not to tip it over and to be careful when placing it on the ground.

| Symbols used on the packaging | |
|---|---|
| | **Fragile, handle with care.**<br>Indicates that the contents of the package are fragile and must be handled with the utmost care. |
| | **Keep dry**<br>Indicates that the package should be kept in a dry place. |
| | **This way up.**<br>Indicates that the package must be stored the right way up. |

## 3.3 INSPECTION UPON DELIVERY

When the goods are delivered (machine, battery or battery charger) by the carrier, carefully check the condition of the packaging and its contents. If the contents have been damaged, inform the carrier immediately and reserve the right, in writing (select the “accepted with reserve” item on the document), to submit a claim for compensation before accepting the goods.
The package contains the following:

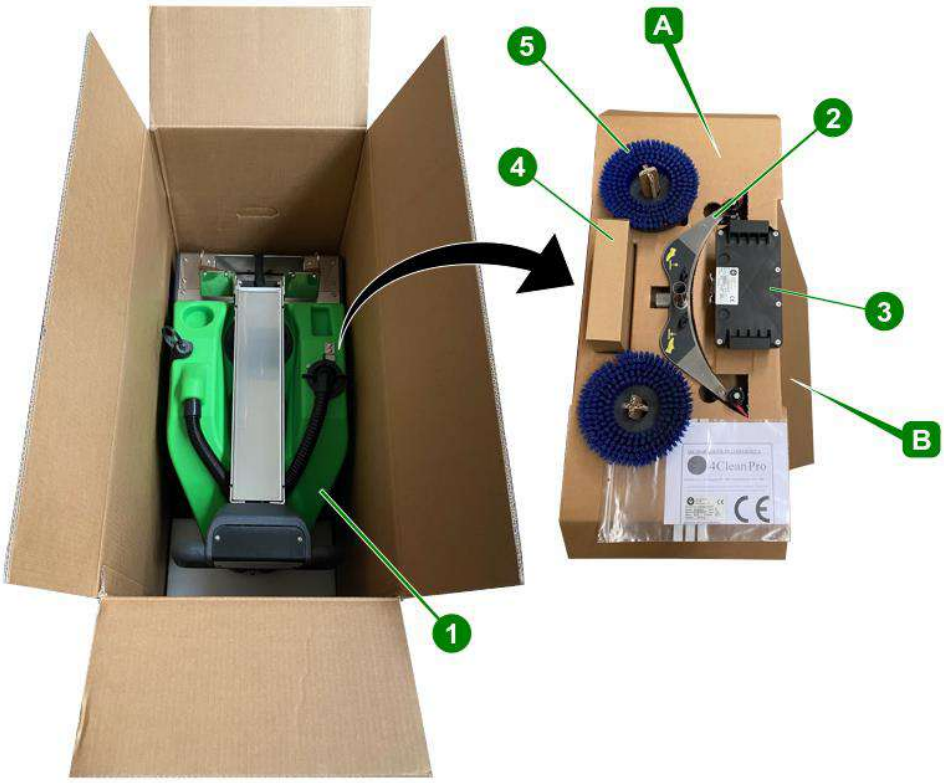


| | |
|---|---|
| **1** | Scrubber-dryer |
| **2** | Squeegee |
| **3** | Battery |
| **4** | Battery charger |
| **5** | Brushes |

## 3.4 UNPACKING

To unpack the machine, proceed as follows:

1) Remove the accessories and their housing cardboard **(A)**;
2) Remove the top packaging insert **(B)**;
3) Grip the machine by the handle and bring it into an upright position
4) Remove the machine from the box.

**NOTE:**
*We recommend that you keep all packaging materials because they may be useful in the future to protect the machine and accessories when transporting it to an authorised service centre.*
*If you do not wish to keep the packaging materials, they should be disposed in accordance with current waste disposal legislation.*

## 3.5 ASSEMBLING THE MACHINE

**DANGER!**
**All the operations described below must be carried out in areas having adequate lighting and only when the battery has been removed from the machine.**

After unpacking the machine, it must be assembled as described below (refer to the relevant sections in Chapter 5 for a detailed description of these procedures):

1) Fit the brushes
2) Fit the squeegee and make sure that it is securely fastened and connected to the suction hose.
3) Fill the solution tank.
4) Place the battery into the compartment and connect the connector.

## 3.6 TRANSPORTING THE MACHINE AFTER USE

To make transporting the machine on motor vehicles easier and more practical, completely empty the solution tank (see paragraph 5.9 page 26) and the recovery tank (see paragraph 5.10 page 26).
This prevents possible spillage of liquid during transport, increasing lightness and facilitating lifting of the machine.

# 4 TECHNICAL INFORMATION

## 4.1 GENERAL DESCRIPTION OF COMPONENTS

| | |
|---|---|
| 1 | ON/OFF switch |
| 2 | Power indicator light |
| 3 | Brush / Brush+Water switch |
| 4 | Vacuum motor switch |
| 5 | Dashboard |
| 6 | Handle tube |
| 7 | Battery |
| 8 | Water drain hose |
| 9 | Clear water tank |
| 10 | Movement wheels |
| 11 | Squeegee |
| 12 | Brushes |
| 13 | Rotating work plate |
| 14 | Plate rotation limit switch |
| 15 | Water level indicator |
| 16 | Solution tank filter |
| 17 | Recovery tank |
| 18 | Suction hose |
| 19 | Floating |
| 20 | Dirty water supply hose |
| 21 | Handle release/lock lever |
| 22 | Suction motor |
| 23 | Water filter |
| 24 | Battery charger |

## 4.2 CONTROL PANEL (VERSION 4 AND ABOVE)

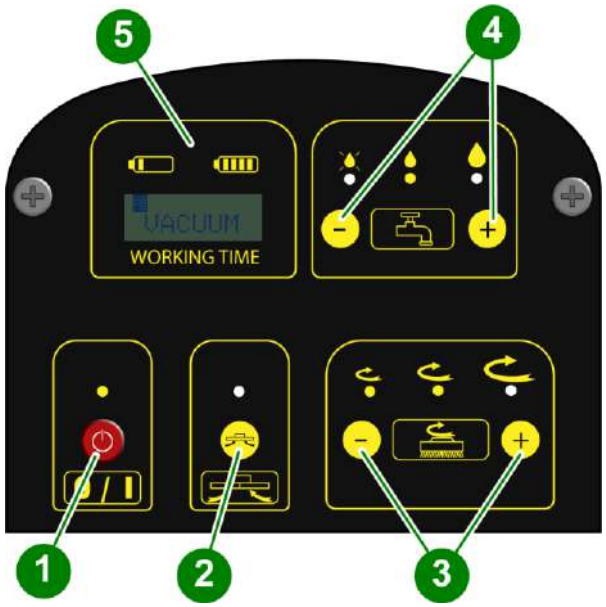


| N. | FUNCTION | DESCRIPTION |
|---|---|---|
| 1 | ON/OFF | Turns the machine on or off |
| 2 | Vacuum | Activates or deactivates the vacuum function |
| 3 | Brush speed adjustment | The speed of the brushes is increased or decreased by pressing the + or – buttons |
| 4 | Detergent flow adjustment | The amount of detergent is increased or decreased by pressing the + or – buttons |
| 5 | Battery charge indicator display | The display indicates the battery charge level |

### *4.2.1 VACUUM LEVEL CONTROL*

When buttons **(1)** and **(2)** are pressed simultaneously for 5 seconds, “VACUUM” appears below the battery charge indicators on display **(5)**.
The vacuum level can be increased or decreased by pressing the buttons **(3)**; this is shown on display **(5)**.
To store the vacuum level selected, turn the machine off using the main on/ off switch **(1)**.
The vacuum level that was saved is shown on the display **(5)** when the machine is switched on using switch **(1)**.

## 4.3 DIMENSIONS AND TECHNICAL DATA

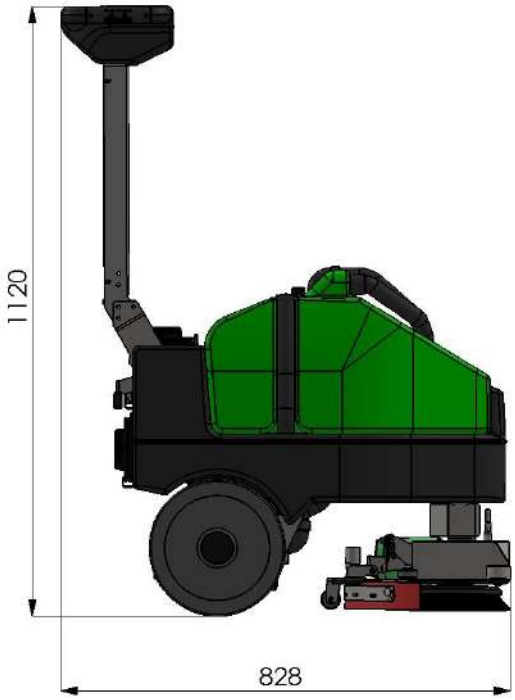


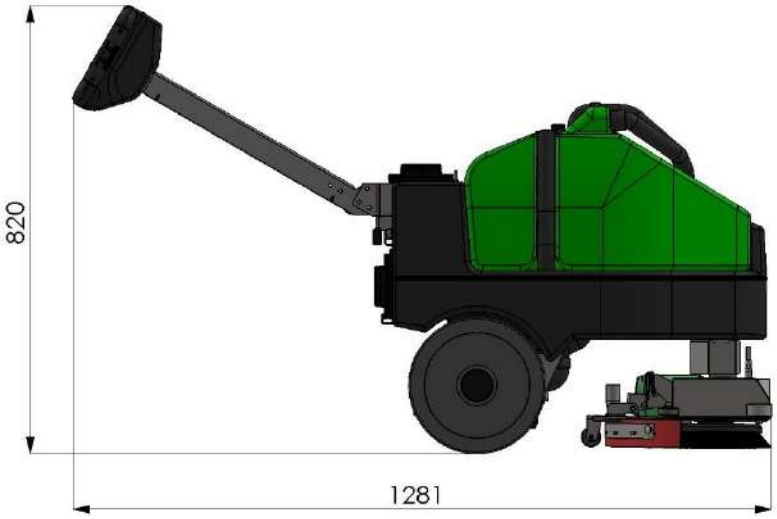


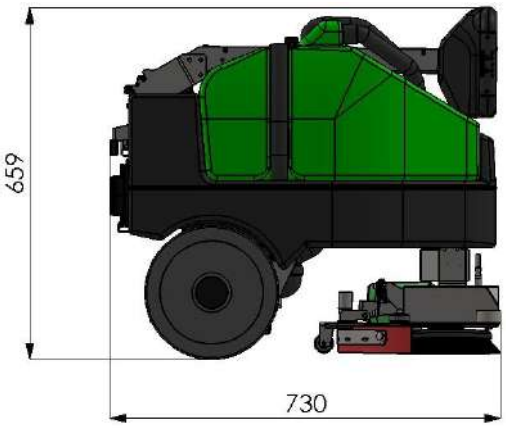


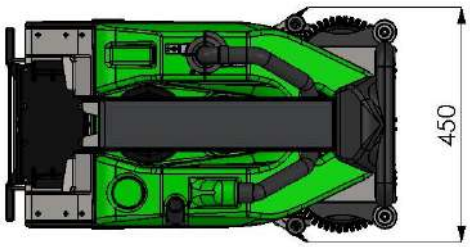


| Descrizione | UM | Valore |
|---|---|---|
| Power supply | V | 36 |
| Performance | $m^2/h$ | 1200 |
| Cleaning width | mm | 410 |
| Squeegee blade width | mm | 450 |
| Brush diameter | mm | 2 x 204 |
| Brush speed | rpm | 145/175/210 |
| Brush pressure | Kg | 22 |
| Brush motor power | W | 2 x 36/120 |
| Vacuum motor power | W | 36/300 |
| Solution/recovery tank capacity | lt | 18/20 |
| Noise Level | db | 66 |

Measurements are in millimetres.

# 5 USING THE MACHINE

## 5.1 PREPARING THE MACHINE

**DANGER!**
**All maintenance work or the replacement of accessories must be carried out in areas with adequate lighting and only after having disconnected the machine from the power supply by unplugging the battery connector.**

**CAUTION**
**Before starting, put on non-slip shoes, gloves and any other personal protection equipment indicated by the supplier of the detergent or required by the environment in which the machine is to be used.**

**NOTE:**
*Carry out the checks described below before you start to use the machine (refer to the relative sections for a detailed description of these procedures).*

1) Fit the brush or pad driver (with abrasive pad) that is suitable for the surface and the work to be performed. (see table page 19)
2) Fit the squeegee and make sure that it is securely fastened, connected to the suction hose and that the blades are not excessively worn.
3) Fill the solution tank with a mixture of clean water and a suitable amount of non-foaming detergent.
4) Check the battery charge level and charge if necessary.

**NOTE:**
*To avoid hazards, we recommend that you become familiar with the machine movements by experimenting on a large surface that is free from obstacles.*

To obtain the best results in terms of cleanliness and the service life of the appliance, you should follow a few simple, but important procedures:

- Identify the work area and remove all possible obstacles that may get in the way. If the surface is very large, work in contiguous and parallel rectangular areas.
- Choose a straight work trajectory and start working from the area furthest away to avoid going over areas that have already been cleaned.

## 5.2 RECHARGING THE BATTERY

1) Connect the battery extension cable **(1)** to the plug of the battery charger **(2)**.
2) Plug the battery charger into a mains socket and charge the battery as long as the red LED on the battery charger **(2)** remains on.
3) When the green LED on the battery charger **(2)** lights up it means that it is fully charged.
4) Disconnect the plug of the battery charger **(2)** from the battery extension cable **(1)**.

## 5.3 FITTING AND REMOVING THE BRUSH

**CAUTION**
**Only use the machine if the brushes or pad drivers, together with abrasive disk, are installed properly.**

**Assembly procedure:**
1) Lock the handle using the appropriate locking lever in the vertical position. (N.21 pag.15)
2) Grasp the handlebar and, leveraging it, lift the front part of the machine by pushing downwards **(A)** making a rotation.
3) Insert **(B)** the brushes into the appropriate pins and press **(C)** all the way down.

**To remove them, follow the procedure indicated in point 3 in reverse.**

**NOTE:**
*Follow the same procedure to fit / remove the pad driver.*

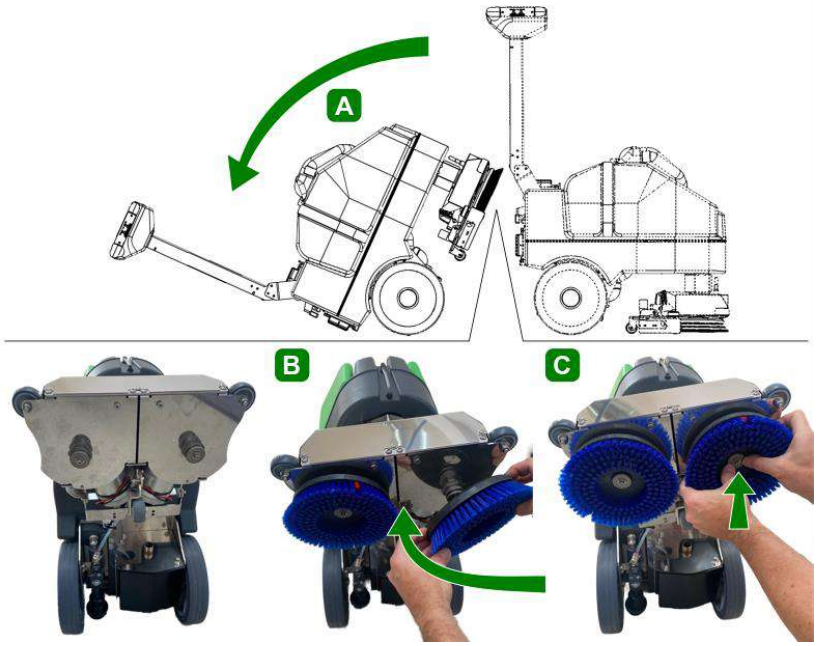


**CAUTION**
**REPLACE the brushes / abrasive discs before the length of the bristles or the thickness of the abrasive discs become less than 1 cm.**
**Working with brushes that are excessively worn, or abrasive discs that are excessively thin, may damage the machine and the floor.**
**Regularly check the wear on these parts before starting to use the machine.**

### *5.3.1 BRUSH TYPES*

Four different types of brush are supplied with the machine. Their characteristics differ according to their composition and abrasiveness. Their use depends on the type of floor or the specific application.

| N. | Picture | Brush name | Description |
|---|---|---|---|
| 1 | | **PPL 06 BRUSH** | Can be used for cleaning hard surfaces such as cement, tiles, clinker, porphyry etc. |
| 2 | | **PAD DRIVER** | Covered with Velcro and a sponge disc (pad). The abrasiveness of the sponge varies according to its colour: white (soft) to black (very abrasive).<br>Choose the type of sponge according to the type of floor, for example:<br>· parquet - white or yellow<br>· PVC - blue or red<br>· wax removal or cement - brown or black. |
| 3 | | **P.E.S. BRUSH** | Fibre bush with bristles of various diameters (from 0.1 to 0.6 mm).<br>Can also be used without detergent on treated surfaces or wood. Its mixture of bristles means it can also be used just to polish treated floors. |
| 4 | | **TYNEX BRUSH** | Made of carbon fibre, it can be used only for heavy duty cleaning applications. For example on tiles in industrial kitchens, production departments with machine tools, foundries etc.<br>When used with a suitable detergent, it can be used to remove sludge or dirt consisting of lime deposits or of plant or animal origin (grease).<br>**Warning:** The Tynex brush **MUST NOT be used on delicate flooring materials** (such as parquet, marble, PVC etc.). |

| N. | Picture | Brush name | Description |
|---|---|---|---|
| 1 | | **BLUE DISC** | LIGHT CLEANING<br>Light cleaning and spray cleaning. |
| 2 | | **GREEN DISC** | INTERMEDIATE CLEANING<br>Disk for removing the superficial layers of wax and for preparing the floor for the subsequent treatment. Wet use. |
| 3 | | **BROWN DISC** | ENERGETIC CLEANING<br>Aggressive disc for wet or dry scraping, with wax removers. Prepare the floor for the new waxing. Resistant to acids. |
| 4 | | **BLACK DISC** | STRIPPING<br>For wet stripping of thick layers of wax. Removes the old finish and eliminates cement marks. |
| 5 | | **WHITE DISC** | FINISHING AND POLISHING<br>Suitable for finishing treated floors and high gloss polishing. Use dry or slightly damp. |
| 6 | | **RED DISC** | SPRAY POLISHING<br>For frequent use on relatively clean floors.<br>Also cleans and polishes dry, removing scuff marks. |
| 7 | | **BEIGE DISC** | POLISHING<br>For the light cleaning and maintenance of all types of floors. Use dry. |
| 8 | | **MICROFIBRE DISC** | FOR ALL SURFACES<br>Wide range of microfibre discs. |

## 5.4 MOVING THE MACHINE

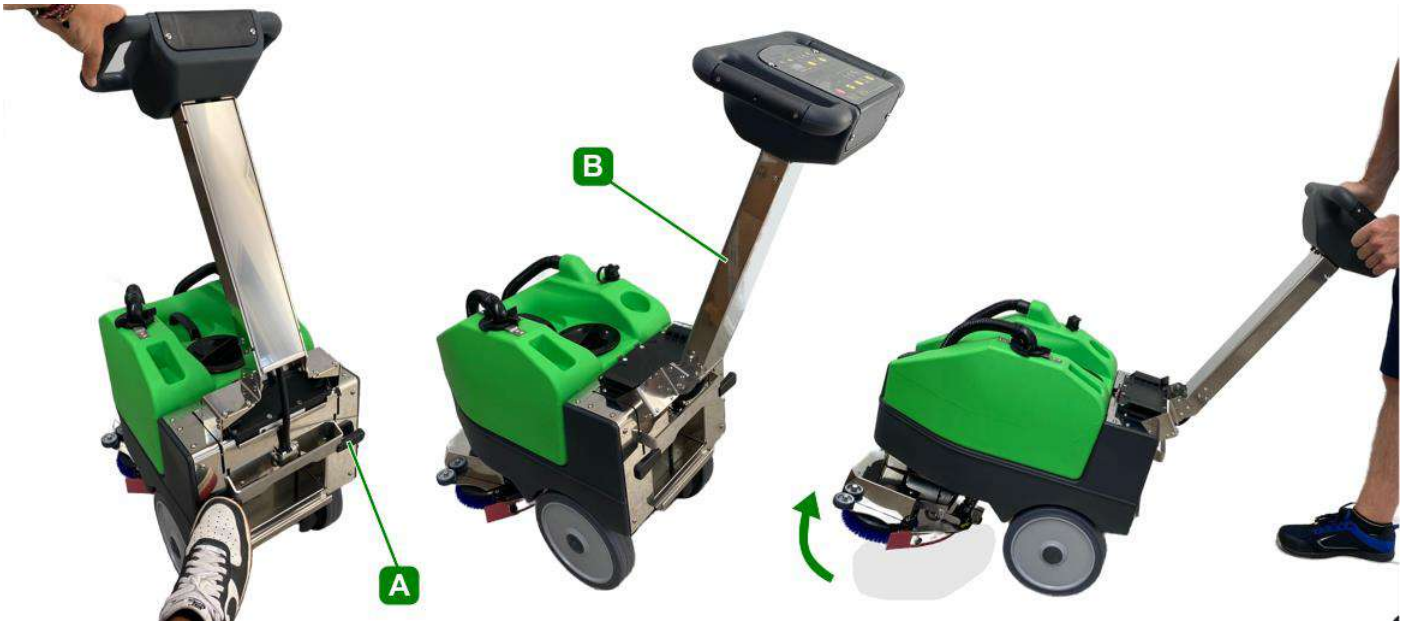


With the machine off, lower the front lever “A”, finding the most suitable position for the handle “B”. In this phase it is possible to move the machine by leveraging the handle and lifting the plate with the brushes.

**CAUTION**
**Make sure that the recovery tank cap is tightly closed, the inclination of the machine could cause liquid to leak from the tank itself.**

## 5.5 STORAGE

To store the machine, lower the handle locking/unlocking lever; place the handle in the vertical position and tilt the machine, placing the solution tank on the ground; as during the assembly or disassembly of the brushes (paragraph 5.3). Keep it in this position or extract the brushes and return the machine to the working position, then close the handle in position 0 (horizontal).

**CAUTION**
**Do not store the machine with the brushes resting on the floor, the weight may deform the bristles and affect their performance.**

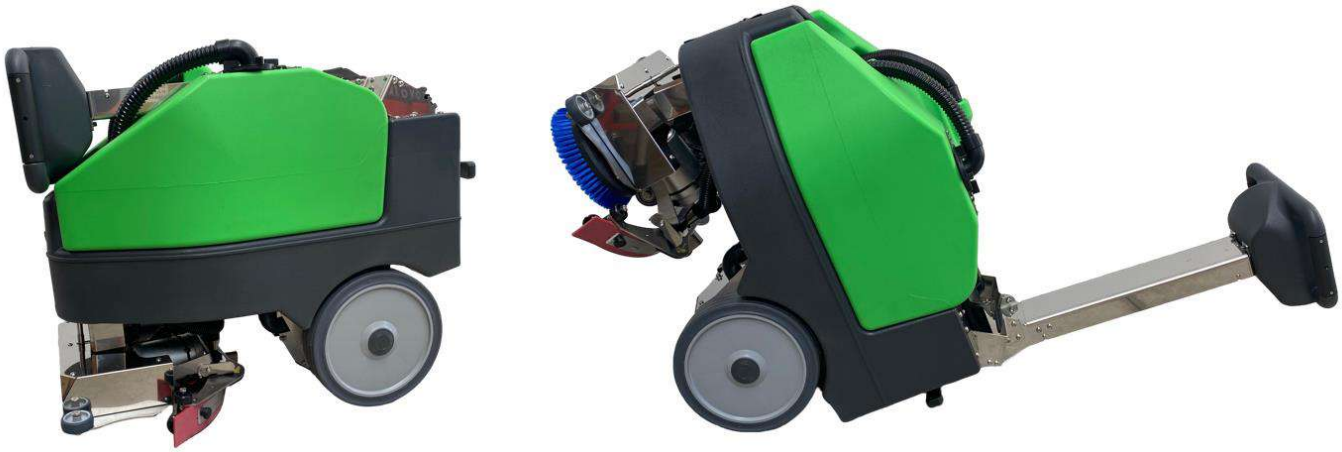

## 5.6 LOCKING / RELEASING, RAISING THE SQUEEGEE

Rotate the plate slightly making access easier. When the squeegee is raised from the floor by plate **(1)** the catch **(2)** is engaged that allows the squeegee to remain in a raised position.
To return the squeegee to the floor, lift the catch **(2)** to release it.

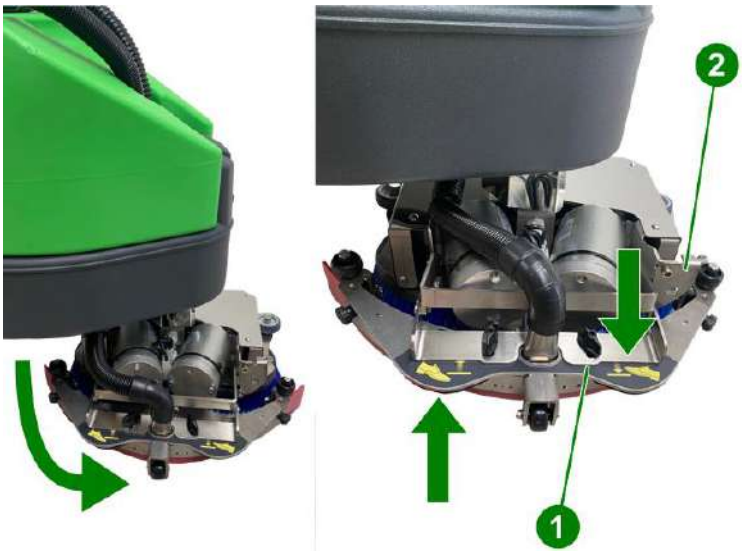


## 5.7 FITTING AND REMOVING THE SQUEEGEE

**Assembly procedure:**

1) Position the squeegee support **(1)** so that it is facing upwards A
2) Insert the squeegee **(2)** onto the holes **(X)** in the support **(1)**.
3) Tighten the knobs **(3)** securely to fasten the squeegee **(2)** to the support **(1)**.
4) Insert the suction hose **(4)** into the sleeve **(5)**.).

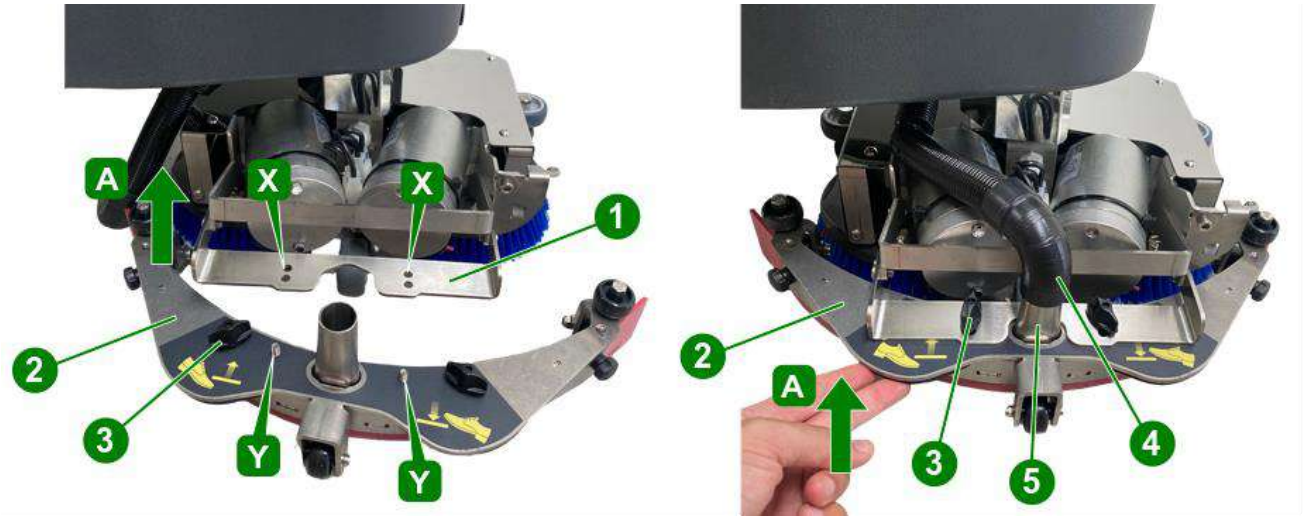


**Removal procedure:**

1) Position the squeegee support **(1)** so that it is facing upwards **(A)**
2) Disconnect the suction hose **(4)** from the sleeve **(5)**.
3) Loosen the knobs **(3)** that fasten the squeegee **(2)** to the support **(1)**.
4) Remove the squeegee **(2)**.

## 5.8 REPLACING THE SQUEEGEE BLADES

1) Remove the squeegee **(A)** from its support (see previous section).
2) Completely unscrew the rear knobs **(1)** and remove the pins **(2)**.
3) Remove the squeegee blade **(4-6)** clamping strips **(3-7)**.
4) Remove the rubber blades **(4-6)** from the body **(5)** of the squeegee by pulling them from one end.
5) To replace the rubber blade, follow the same procedure in reverse starting from the rear blade **(6)**.
6) Fit the rectangular holes on the blades into the seats on the body **(5)** of the squeegee.
7) Replace the blades **(4-6)** and the clamping strips **(3-7)**.
8) Insert the pins **(2)** and fasten the whole unit using the knobs **(1)**.

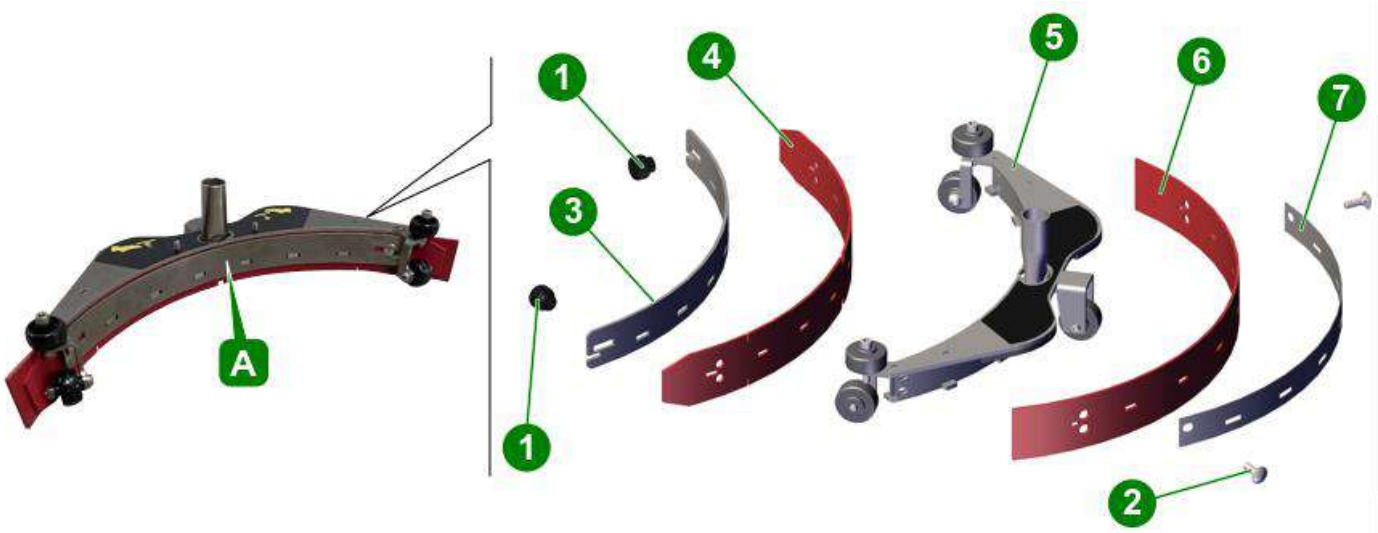


**CAUTION**
**The front rubber blade is different from the rear blade as it has notches through which water can pass.**
**The clamping strips are identical.**

## 5.9 FILLING AND EMPTYING THE SOLUTION TANK

**NOTE:**
*The temperature of the water or the detergent added should never exceed 50°C.*
*Always empty the recovery tank every time you fill the solution tank.*

**CAUTION**
**Use only products suitable for the floor and for the dirt that has to be removed.**

**Filling procedure:**

1) Do not remove the filter **(1)**.
2) Pour the required quantity of the chemical product into the tank, considering the percentage quantity (%) of the supplier, referring to the capacity of the full tank indicated in the product sheet.
3) Use a rubber hose directly from the water tap (always without removing the filter).
4) Check the filling level of the tank using the level indicator **(2)** positioned on the front of the machine.

**CAUTION**
**Always use non-foaming detergents (low foam).**
**The use of other chemical products (such as sodium hypochlorite, oxidisers, solvents or hydrocarbons) may damage or cause irreparable damage to the machine.**

The machine has been designed for use with non-foaming and biodegradable detergents that are specific for scrubber-dryers.
**Follow the safety regulations indicated in the relative section and on the detergent container.**

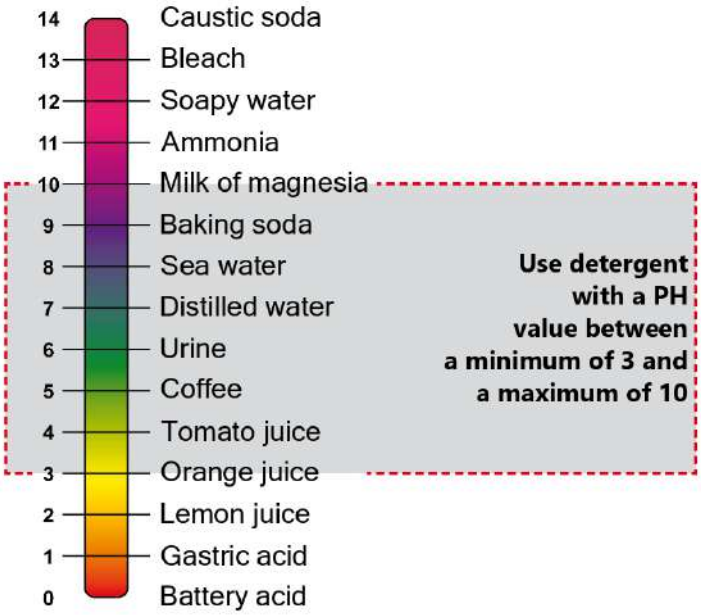


**NOTE:**
*For a complete list of suitable detergents available, please contact the machine manufacturer.*

**Emptying procedure:**

1) Check that the water tap **(1)** is open.
2) Unscrew the drain plug **(2)**, located in the lower area of the tank.
3) Remove the filter element **(3)** and wait for the tank to be completely empty.
4) Screw the drain plug **(2)** back firmly.

**CAUTION**
**As soon as the drain plug is unscrewed, the liquid will flow out immediately.**

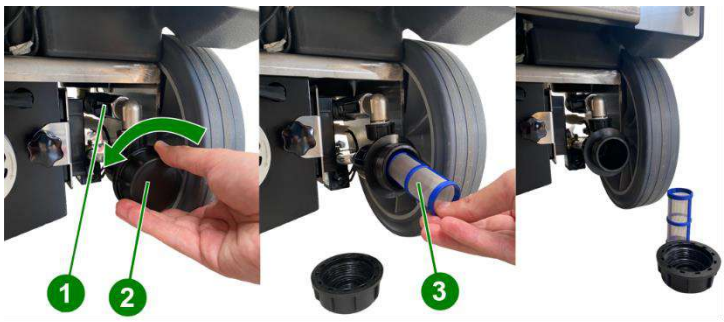


## 5.10 DRAINING THE RECOVERY TANK

1) Move the machine to a suitable place in which to empty the dirty water, preferably close to a drain (**comply with national regulations regarding the disposal of waste water**).
2) Extract the flexible hose **(1)** from its seat.
3) Allow the recovered water to flow into the sewer drain until the tank is completely empty (2).
4) Insert the flexible hose **(1)** into its seat.
5) Remove the tubes **(3)** and **(4)** from their seats.
6) Remove the tank **(2)**.
7) Unscrew the top cap **(5)** of the tank.
8) Proceed with cleaning or removing the residual recovery water in the tank.
9) Screw the top cap **(5)** back on tightly.
10) Reposition the tank **(2)** correctly.
11) Insert the tubes **(3)** and **(4)** into their seats.

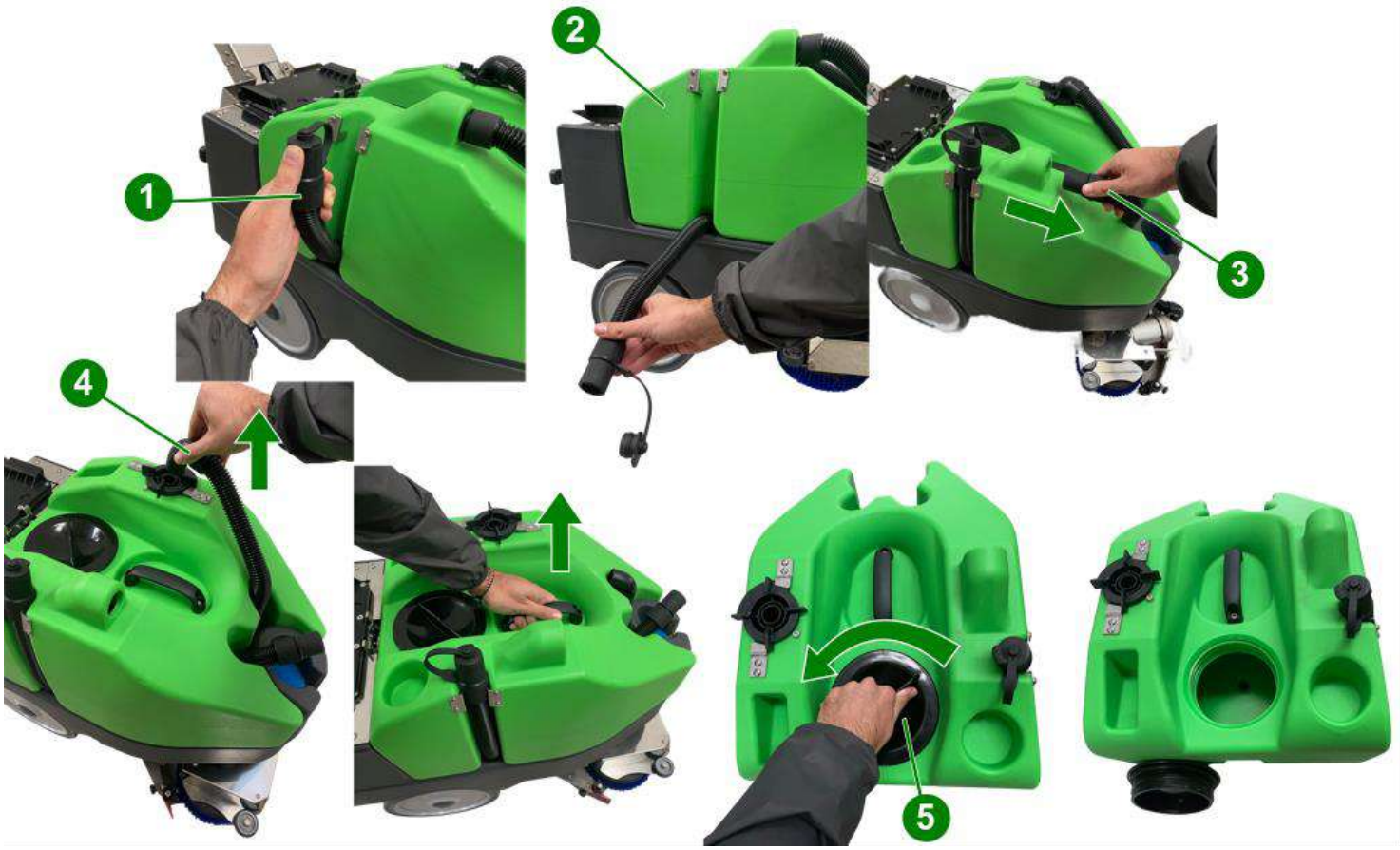

## 5.11 OPERATING THE MACHINE

1) Check that the switches on the control panel are turned off:
   - Panel B: indicator lights off
2) Lower the squeegee.
3) Lift the handle **(4)** for working mode.
4) Lower the release lever **(5)** to adjust the handle to the most suitable position.
5) Power up the machine using the ON/OFF button **(1)** (the LED **(6)** lights up).
6) Start the brushes and the dispensing of the solution (water + detergent) using the button **(2)**.
7) Activate the suction using the button **(3)**.
8) Wash the floor, proceeding slowly forwards and even backwards, allowing the plate **(7)** to rotate, in both directions, until it reaches its limit switch **(8)**; accompanying the advancement of the machine given by the movement of the brushes in operation.
9) Ability to pass and clean under tables, the latter increases by tilting the handle **(4)** to its lowest position.

**CAUTION**
**Remember to lift the squeegee before backing up to avoid squeegee failure.**
**(Unless the platter is rotated 180°)**

**NOTE:**
*The machine is fitted with a motor overload protection system that stops the motor in the event that the ON/OFF switch is pressed repeatedly at short intervals.*
*The machine must be restarted in order to resume normal operation.*

## 5.12 FLOOR CLEANING INSTRUCTIONS

### *5.12.1 PREPARATION AND WARNINGS*

Remove any loose solid residues from the surface to be treated (using suitable equipment such as vacuum cleaners, sweepers, etc.) If this is not done, the solid dirt could prevent the squeegee from working properly and prevent the floor from being dried correctly.
This machine must only be used by trained personnel.

**CAUTION**
**Do not obstruct the motor cooling fan grille.**

### *5.12.2 DIRECT WASHING OR FOR SLIGHTLY DIRTY SURFACES*

Scrubbing and drying in a single pass.
Prepare the machine and use it as described in section 5.1.

**NOTE:**
*Never use the machine without a detergent solution as it may damage the floor.*

### *5.12.3 INDIRECT WASHING OR FOR VERY DIRTY SURFACES*

Scrubbing and drying in multiple passes.
Prepare the machine and use it as described in section 5.1.

**First step:**
Wash the floor as described in section 5.1 without drying it.
Give the detergent solution time to act on the dirt, as indicated in the instructions of the detergent used.

**Second step:**
Proceed as explained in the previous section and also dry the floor.

**NOTE:**
*Never use the machine without a detergent solution as it may damage the floor.*

### *5.12.4 POST-CLEANING OPERATIONS*

1) Turn off the detergent dispensing function.
2) After having completely dried the surface of any traces of water, wait a few seconds, then raise the squeegee and turn off the vacuum motor.
3) Go to a suitable place where to drain the tanks.
4) Empty and clean the tanks (see sections 5.9 and 5.10).
5) Turn off the machine using the ON / OFF switch
6) Lock the handle using the locking lever.
7) Charge the battery, if necessary.

# 6 MAINTENANCE

**DANGER!**
**All maintenance work or the replacement of accessories must be carried out in areas with adequate lighting and only after having disconnected the machine from the power supply by unplugging the battery connector.**

**NOTE:**
*All work on the electrical system and all maintenance and repair work (especially work not specifically described in this manual) should only be carried out at authorised service centres or by skilled personnel with experience in the field and knowledge of the relevant safety regulations.*
*Carrying out regular maintenance on the machine, carefully following the manufacturer's instructions ensures better performance and a longer machine service life.*

## 6.1 TANKS

Drain the two tanks as described in the relative sections 5.9 and 5.10.
Remove any solid dirt by filling and draining the tanks until all dirt has been eliminated.
Do this using a hose or similar item and only wash the inside of the tank.

**CAUTION**
**Water temperatures in excess of 50°, high-pressure washers or excessively powerful sprays can damage the tanks and the machine.**
**Leave the plugs of the tanks open (only while the machine is not being used) so that the tanks can dry and prevent the formation of unpleasant odours.**

## 6.2 DETERGENT SOLUTION TANK FILTER

1) To clean the detergent solution filter, remove the plug **(1)** and the filter element **(2)**.
2) After cleaning, place the filter element **(2)** back into its seat and screw the plug back on **(1)**.

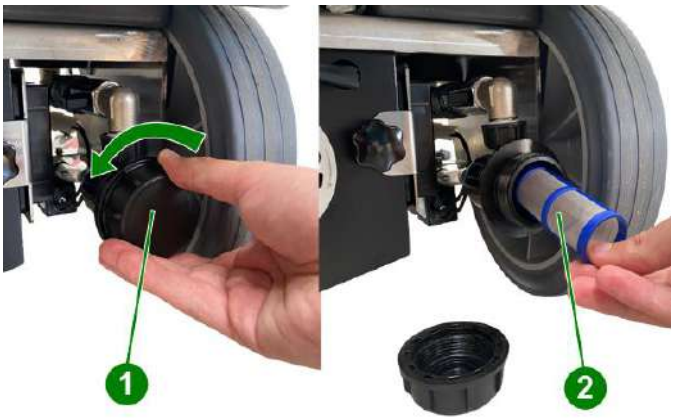


## 6.3 SUCTION HOSE

1) Disconnect the suction hose **(1)** from the squeegee **(2)**.
2) The hose **(1)** can now be cleaned and any obstructions removed.
3) After cleaning, insert the hose **(1)** firmly onto the squeegee body **(2)**.

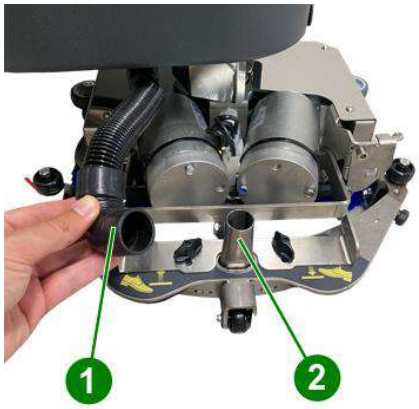

## 6.4 SQUEEGEE

**CAUTION**
**Do not handle the squeegee with bare hands: wear gloves and any other protective clothing that may be necessary.**

Remove the squeegee from the machine and clean it under running water using a sponge or brush.
Check the effectiveness and the wear of the rubber blades that are in contact with the floor.
They are designed to scrape the detergent-water film on the floor and to isolate that area of the surface to help the vacuum motor reach the maximum vacuum pressure: this ensures that the machine will dry the floor completely.
Working like this continuously causes the sharp edge of the blade to become round or to wear, thereby reducing its drying efficiency. The squeegee blades must therefore be replaced fairly often.
If necessary, turn the blades in order to use the other sharp edges or to install new ones (see section 5.8).

## 6.5 VACUUM FILTER

1) Rotate the filter support **(1)** until to get out of the metal plate locker **(3)**.
2) Remove the filter support **(1)** from the tank **(2)**.
3) Remove the filter **(2)** from its seat and clean it under running water.
4) After cleaning, put the filter **(2)** back in its seat.
5) Correctly reposition everything in the tank.

## 6.6 ACCESSORIES

Remove and clean the brush or pad driver (see section 5.2).
Check that the brushes work evenly on the surface (check for any irregular wear on the brushes or abrasive disks).

**CAUTION**
**To avoid damaging the floor and the machine, make sure that no foreign objects, such as metallic parts, screws, chippings, string or similar items, have become caught in the brushes.**

**NOTE:**
*Only use accessories recommended by the manufacturer:*
*Using products that are non-compliant may affect safety and damage the machine.*

## 6.7 MACHINE BODY

Use a sponge or a damp cloth to clean the outside of the machine and if necessary, use soft brush to eliminate stubborn dirt.
The machine's impact resistant surface is rough to make it harder to see scratches produced during use. However, this does not make it easy to remove stubborn stains from its surface.

**CAUTION**
**Never use steam cleaners, hoses with running water or high-pressure washers.**

## 6.8 MAINTENANCE SCHEDULE

**NOTE:**
*For all the operations described here, refer to the detailed instructions and warnings given in the relative sections.*

The frequency with which the routine maintenance is carried out is determined by the number of complete machine discharge cycles.
The machine has an autonomy of approximately 1 hour. Each cycle is considered to be 1 working hour..

| Cycles | Description |
|---|---|
| **1** | Clean the squeegee (see section 5.7) |
| **5** | Clean the solenoid valve filter (see section 6). |
| | Clean the vacuum filter (see section 6.5). |
| **10** | Clean the bottom plate **(3)** and particularly the clean water nozzles **(4)** using a damp cloth or abrasive sponge. |
| **50** | Turn the rubber squeegee blades. |

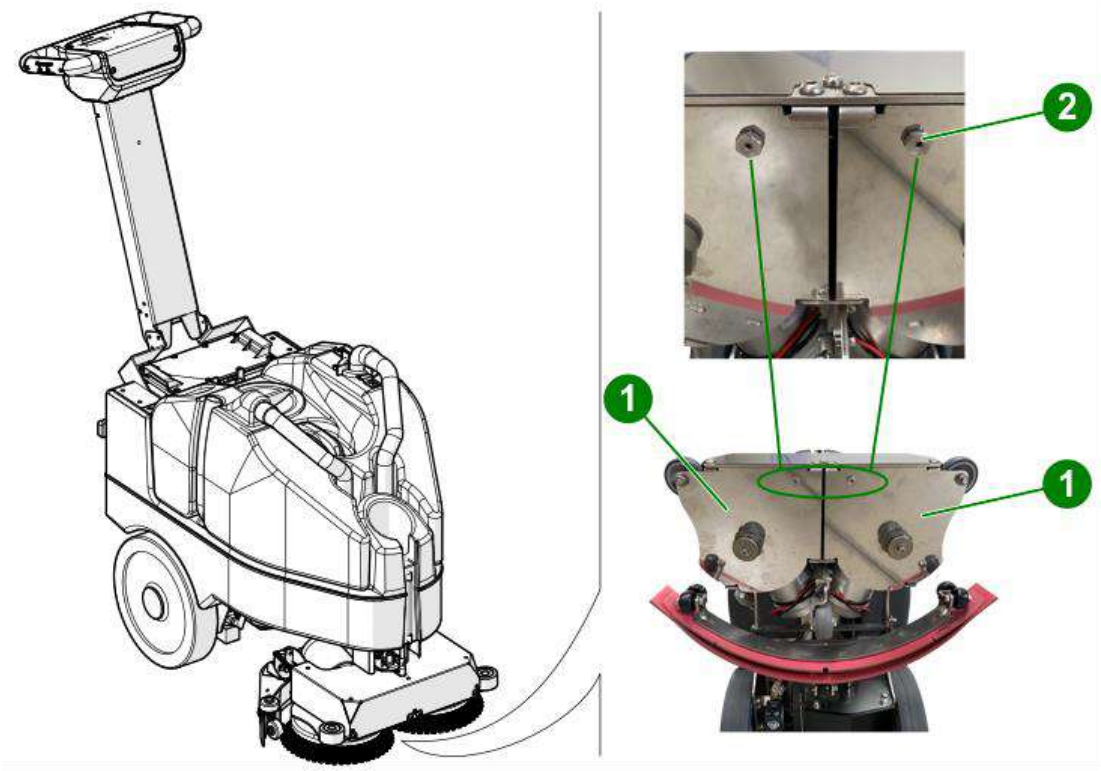


## 6.9 EXTRAORDINARY MAINTENANCE

Even though the machine has been carefully built and conforms with the most stringent quality tests, the electrical and mechanical components are inevitably subject to wear and ageing after long periods of use.
In order for the machine to provide safe and trouble-free service, it is recommended that your machine be thoroughly inspected **every year** at a service centre authorised by the manufacturer (or by someone specialised in the field who has the proper skills and who is familiar with all the relevant safety regulations contained in this manual).
This may need to be done more frequently if the machine is used in particularly harsh conditions and / or if it has not been properly maintained.

## 6.10 RECOMMENDED SPARE PARTS

To get the most out of your machine, it is recommended that you always keep a stock of the common consumables and to schedule routine and extraordinary maintenance
Contact your dealer for a list of these spare parts.

# 7 TROUBLESHOOTING

**CAUTION**
**The content of this chapter is not exhaustive but it aims to provide information regarding the most common problems in order to help the user to troubleshoot faults.**
**The instructions under the heading "SOLUTION" in the table below DO NOT AUTHORISE work to be carried out that can affect safety.**

Please anyway refer to the corresponding section in this manual for details of the type of action to take.

| PROBLEM | CAUSE | SOLUTION |
|---|---|---|
| The machine does not switch on | Low battery | Check the battery connection.<br>Check the battery charge level.<br>Replace the battery. |
| The brush doesn't rotate | Low battery | Check the battery connection.<br>Check the battery charge level.<br>Replace the battery. |
| | Electronic cards are in standby | Turn the machine off and then on again. |
| The vacuum motor doesn't start | Low battery | Check the battery connection.<br>Check the battery charge level.<br>Replace the battery. |
| | Electronic cards are in standby | Turn the machine off and then on again. |
| The vacuum motor does not remove the water | Suction hose and / or filter clogged | Clean the suction hose and / or filter |
| The water does not reach the brushes | The water tank is empty or the internal filter is clogged | Remove the tank drain plug and clean the filter. |
| ERR 6 MOT | Current threshold error | Engine problem, turn the machine off and on again. Disconnect and reconnect battery. |
| ERR 2 SPZ | Shut_down brushes error | Brush motor problem, turn the machine off and on again. Disconnect and reconnect battery. |
| ERR 1 ASP | Suction Shut_down error | Suction motor problem, turn the machine off and on again. Disconnect and reconnect battery. |
| ERR 3 TMP | Maximum temperature | Maximum engine temperature, turn the machine off and on again. If necessary, let it cool. |

# 8 DISPOSAL OF THE MACHINE

Once it has reached the end of its life, the machine requires special disposal of its components which is indicated in the following list:

- Polyethylene components ► Storage with shredding and separation of pollutants.
- ABS components ► Storage with shredding and separation of pollutants.
- Stainless steel components ► Direct recovery in metallurgical plants, storage for the elimination of foreign substances.
- Aluminum components ► Direct recovery in metallurgical plants, storage for the elimination of foreign substances by granulation.
- Galvanized ferrous components ► Direct recovery in metallurgical plants, storage for the elimination of foreign substances.
- Painted ferrous components ► Direct recovery in metallurgical plants, storage for the elimination of foreign substances.
- Wiring and similar ► Reprocessing with mechanical processing for the removal of the coating, grinding and granulation of the rubber, granulation of the metal fraction for recovery in the metallurgical industry.
- Rubber based components ► Recovery in the rubber industry for compatible mixes, recovery in bitumen production, storage for the elimination of foreign substances by granulation.
- Wooden packaging ► Stockpiling of wood waste for obtaining raw materials.
- Paper packaging ► Direct reuse in the paper industry or put in reserve for the production of secondary raw material for the paper industry.
- Motors ► Disassembly for separation of reusable components.
- Electronic cards ► Disassembly for separation of reusable components.
- Batteries ► They are the only component of the machine made of hazardous material. It is therefore recommended that they be disposed of by taking them to a specialized center.